ESTIMATION OF SUCROSE LOSS DUE TO INVERSION PROCESS AS A RESULT OF MULTIPLE EFFECT EVAPORATION

By

Muwanika Ibrahim

BIC/44037/143/DU

A research project submitted to the

Department of Physical Sciences,

School of Engineering and Applied Sciences

Kampala International University

In partial fulfillment for the requirement for the Award of Bachelors of Science in Industrial Chemistry

September 2017

DECLARATION

I MUWANIKA Ibrahim, declare that this work is not a duplication of another person's work but it is out of my individual efforts and knowledge acquired at Kampala International University during my three years of study, (August, 2014 - May,2017).

Signature.....

Date..05.../..10...../...2017..

APPROVAL

This project report ESTIMATION OF SUCROSE LOSS DUE TO INVERSION PROCESS AS A RESULT OF MULTIPLE EFFECT EVAPORATION by MUWANIKA Ibrahim meets the regulations governing the award of the degree of Bachelor of Science in Industrial Chemistry of Kampala International University, and is approved for its "contribution to knowledge" and literary presentation.

Signature..... Date.05..... /.....10...../.....2017

Dr. Nwankwere Thompson Emeka (Supervisor).

DEDICATION.

This project is dedicated to my mum Betty Naikazi, whose love and guidance have given me great appreciation for knowledge and hard work.

With special dedication to my aunt Barbra Mirembe whose generosity inspires me to be a better nephew.

ACKNOWLEDGEMENTS

I am highly indebted to my lecturers in my course more especially Dr. Emeka Thompson Nwankwere, Mr. Kissa Alunga, Mr. Twinamasiiko Richard and Mr. Wanasolo William who have tirelessly guided me thoroughly towards the completion of this project.

I wish to thank Mr. Muwonge Timothy, Deputy General Manager of SCOUL, for his support. Also, Mr. Baryayefunza Frank, Deputy Manager for quality control, for reviewing the paper. The help and collaboration received from factory personnel is also gratefully acknowledged. I am also thankful to all the staff of SCOUL for their valued assistance in sample analysis.

I also would like to recognize the company and friendship accorded to me by my fellow course mates in my August 2014 class: Wamuke Nickson, Inyani Andrew, Lawrence Oruk, Karungi Fiona and Makoona Zubairi. Your interactions made my study period colorful with good memories and turned Kampala International University a home away from home. May the Almighty God bless you all.

Lastly, I am thankful to the Almighty God who has blessed me with the courage, strength and wisdom to complete this project.

DEFINITION OF TERMS

Apparent purity: The ratio of Pol to Brix expressed as a percentage.

Bagacillo: Very fine particles of bagasse that serve as a filter aid in muddy juice filtration.

Bagasse: The residue of cane from the last mill used to generate steam.

Brix: The percentage of the total dissolved solutes in a given sugar sample.

Filter cake: The residue obtained by filtration in the process of juice clarification.

Massecuite: The mixture of sugar crystals and mother liquor.

Pol: The percentage/apparent sucrose in a given sample.

Syrup: The heavy liquid obtained from the last evaporator after much of the water has been evaporated off.

Inversion: An irreversible reaction in which sucrose is converted to glucose and fructose.

Mixed juice: The mixture of both diluted juice and primary juice.

Vapour bleeding: The process of heating a sugar solution to produce vapours

ABSTRACT

A major aim of this research project has been to quantify industrial sucrose losses due to inversion in multiple effect evaporators. This paper discusses new insights gained from this project on sucrose losses in sugarcane juices and syrups at high temperatures during different evaporation and clarification processes. In general, for the factory most sucrose inversion losses occurred in the pre-evaporators and were more of a function of temperature, pH and retention time (R.). Sucrose inversion only occurred in later evaporator bodies when scale had built up. Increasing the factory target pH of the clarified juice (CJ) or final evaporator syrup (FES) systematically reduced losses of sucrose and a target FES pH of 6.5 - 6.8 (equivalent to a target CJ pH of 7.0-7.2) is recommended; however, scaling effects can override pH effects.

TABLE OF CONTENTS

LIST OF TABLES

TABLE OF FIGURES

CHAPTER ONE

1.0 Introduction

Sugarcane processing is focused on the production of cane sugar (sucrose) from sugarcane (*Saccharum officinarum*). Sucrose can also be obtained from other plants like sugar beet. But this study concentrates on sucrose from sugarcane. The products of the processing include bagasse, molasses, and filter cake. Bagasse, the residual woody fiber of the cane, is used for several purposes: fuel for the boilers, and agricultural mulch. Bagasse and bagasse residue are primarily used as a fuel source for the boilers in the generation of process steam. Thus, bagasse is a renewable resource. Dried filter cake is used as an animal feed supplement, fertilizer, and source of sugarcane wax. Molasses is produced in two forms: inedible for humans (blackstrap) or as an edible syrup. Blackstrap molasses is used primarily as an animal feed additive but also is used to produce ethanol, compressed yeast, citric acid, and rum. Edible molasses syrups are often blends with maple syrup, invert sugars, or corn syrup.

During sugar (sucrose) processing, a number of reactions take place which have detrimental effects to the process and an example is sucrose inversion. This study basically focusses on sugar/sucrose lost as a result of inversion across multiple effect evaporation. In Uganda, currently, sugar production is 438,400 metric tons per year (USMA,2014) from the existing sugar factories of which the largest producers are; SCOUL, Kakira, Kinyara and other sugar and allied industries limited.

1.1 Problem statement

In evaporators, sucrose is usually lost through thermally catalyzed acid degradation/inversion. The measurement of amount of sucrose loss across the unit process in the sugar industry has not been effectively carried out, and this also means that very limited diagnosis of the process problems contributing to the losses has occurred. This has associated detrimental effects such as decrease process efficiency, increase unwanted color and decrease end product quantity and quality. This as well has costed the industry in terms of profits. Therefore, this project aims at determining the quantity of sucrose loss due to inversion process.

1.2 Aim

The aim of this work was to determine the percentage increase in reducing sugars between clarified juice and syrup.

1.2.1 Objectives

1) To determine reducing sugars in clarified juice and syrup.
2) To determine the PH, brix, pol and purity of clarified juice and syrup.
3) To monitor the effect of the parameters on reducing sugars.

1.3 Significance of the study

The study shall substantially contribute to increase in the productivity of the sugar industries, creation of awareness among small scale companies of the importance and the need for minimization of inversion losses and its effectiveness. It will also improve the quantity and

quality of sugar product standards as required by market authorities. This study shall also be the source of furthering knowledge among students and academicians for research purposes.

1.4 Scope of study

This study was carried out in July/August 2017 at SCOUL to estimate sucrose loss due to inversion across multiple effect evaporators. Sucrose can also be obtained from other plants like sugar beet. But this study concentrates on sucrose from sugarcane.

CHAPTER TWO

2.0 Introduction

According to the U.S. annual report, millions of U.S. dollars are lost each year in the U.S. sugar industry because of the chemical loss of sucrose during harvesting, transportation, and processing. Moreover, there are associated detrimental effects from sugar degradation products formed. Degradation products can increase the loss of sucrose to molasses, decrease process efficiency, increase unwanted color, and decrease end product quality.

The high temperature conditions of clarification and evaporation processes are conducive for some of the highest sucrose losses in raw sugar manufacture. Furthermore, evaporators are often susceptible to scaling problems and the impact of scaling on sucrose losses has never been determined. Factory staff must consider all costs to make reasonable economic decisions on when to clean the evaporators' heat exchangers, and this also should include the impact of scaling on sucrose losses. Optimization of the time between cleaning should also include when the mean hourly cost of sucrose losses achieves its minimum value (Putman, 2001).

2.1 Process Description

2.1.1 Cane sugar production

The manufacturing process of raw sugar consists of the following stages: sugar cane harvesting, transport, milling, clarification, evaporation, crystallisation, centrifugation and drying. There are a number of by-products produced throughout the manufacturing process of raw sugar and are used in a number of applications: bagasse for electricity, paperboard products and chemicals; dried primary mud (filter cake) as fertiliser; and molasses for biofuel production and animal feed.

2.1.2 Harvesting and transport

Hand cutting is the most common harvesting method throughout the world but some locations have used mechanical harvesters for several years. After cutting, the cane is loaded by hand, mechanical grab loaders, or continuous loaders. Cane is transported to the mills using trailers, trucks, railcars, or barges, depending upon the relative location of the cane fields and the processing plants. When the cane is cut, rapid deterioration of the cane begins. Therefore, unlike sugar beets, sugarcane cannot be stored for later processing without excessive deterioration of the sucrose content. When the trucks arrive at the factory, their gross weight is recorded. The tare weight of the offloaded trucks is also recorded. These two weights are used to determine the weight of the cane fed into the process. This process occurs at the weigh bridge.

The weight of the cane calculated from this process is used to ascertain the amount of cane delivered for efficient material balance as well as quality control. The weigh bridge is occasionally calibrated. The cane then proceeds to be offloaded at the feeding tables.

2.1.3 Cane preparation

In cane preparation, the cane is mechanically unloaded, placed in a large pile, and, prior to milling, the cane is cleaned. The preparation process occurs by: breaking the hard structure of the cane. Breaking the cane uses revolving knives, shredders, crushers, or a combination of these processes. The cane is cut and shredded into smaller pieces to enable maximum juice extraction of the juice. Preparation is carried out in order to;

1. Break the big bundles of tangles of cane
2. Allow for better imbibition at the mills

3. Increase sugar extraction at the mills

Prepared cane should be in form of long thin shreds in order to give the best feed ability to the mills.

2.1.4 Milling

The cane is received at the mill and prepared for extraction of the juice. For the grinding, or milling, of the crushed cane, multiple sets of four-roller mills are most commonly used. Conveyors transport the crushed cane from one mill to the next. Imbibition is the process in which water or juice is applied to the crushed cane to enhance the extraction of the juice at the next mill. In imbibition, water from other processing areas is introduced into the last mill, shed cane exiting the last mill is called bagasse. The juice from the mills is screened to remove large particles and then clarified.

2.1.5 Clarification

The raw juice from the mills contains proteinic non sugars, waxy-like material and maximum inorganic anions and cations (Doherty & Edye, 1999). These have to be precipitated and this process occurs during clarification. In raw sugar production, clarification is done almost exclusively with heat and lime (as milk of lime or lime saccharate); small quantities of soluble phosphate also may be added. The lime is added to neutralize the organic acids, and the temperature of the juice raised to about 75^0C. A heavy precipitate forms which is separated from the juice in the clarifier. The insoluble particulate mass, called "mud", is separated from the limed juice by gravity or centrifuge. Clarified juice goes to the evaporators. The clarification process includes the following;

2.1.5.1 Raw juice heating

The temperature of the raw juice that comes from the extraction plant is close to ambient temperature. The raw juice is heated to $75^{o}C$ initially as this is the optimum temperature to get efficient reaction to enable proper settling. The process of raw juice heating occurs in Raw Juice Heaters.

2.1.5.2 Juice reaction

To achieve a good clarification, it is important to add milk of lime to the mixed juice until it reaches a pH of 7-7.5; this operation neutralizes the natural acidity of the juice which prevents inversion (an irreversible reaction in which sucrose is converted to glucose and fructose), and also promotes the formation of insoluble salts, mainly calcium phosphate (Doherty & Edye, 1999). However, higher pH conditions also lead to the formation of reducing sugars (e.g. glucose and fructose) by hydrolysis of sucrose also known as inversion (Honig, 1963). Inversion involves the breakdown of sucrose into glucose and fructose units through the loss of the water molecule and subsequently creates losses of sucrose during subsequent processing and can initiate unwanted side reactions which result in increased colour of raw sugar. Hence, during processing it is desirable to minimize losses of sucrose, while clarifying juice. The precipitate has a tendency to attract mud particles in the juice and hence helps in settling the juice. The juice is retained in the reaction tank for about 7 minutes.

2.1.5.3 Treated Juice Heating

The limed juice is then heated to 103°C-105°C to coagulate the albumin, waxes, and gums and more important flashing it. The flashing operation consists of forwarding the superheated juice to

a vessel open to the atmosphere where most of the dissolved air is eliminated. This operation is important to eliminate entrained air from the juice to avoid undesirable effects like floc floatation. The juice is then sent to the clarifier for settling.

2.1.5.4 Juice Settling

After the flashed juice is sent to the clarifier, a flocculant, which is basically a chain of *polyacrylamide* partially hydrolyzed, is added at the clarifier's feed to form flocs that will settle in the clarifier. These flocs are basically compounded by insoluble calcium phosphate that is formed from the reaction of the milk of lime and the inorganic phosphate present in the juice. If the phosphate concentrations are below 200 ppm the clarification will be poor. If this occurs, phosphoric acid can be dosed to the juice in order to increase the phosphate concentration. The phosphoric acid is usually added prior to heating in order to guarantee enough time to form a floc of good quality. Finally, the juice is separated by sedimentation where two phases are obtained: clear juice and mud. The clear juice (11-13 °Brix) is sent to the evaporators and the muds are filtered in order to recover as much sucrose as possible.

2.1.6 Mud Filtration

After clarification, the mud is removed from the clarifier and then sent to the filters to recover the sucrose from the mud solids. The filtration operation basically consists in mixing the mud with small bagasse particles, known as *bagacilo*, which works as filtration aid. The mud is then pumped onto the filters, where water and vacuum (75 °C) are used to wash the sucrose entrained by the muds. In SCOUL, there is one type of filter that is in use, the rotary vacuum filter, which generates continuously two products: a filter cake that is withdrawn from the process and a filtrate juice (8-9 °Brix) that is continuously recirculated and mixed with the raw juice.

2.1.7 Evaporation

Evaporation is performed in two stages: initially in an evaporator station to concentrate the juice and then in vacuum pans to crystallize the sugar. The clarified juice is passed through heat exchangers to preheat the juice and then to the evaporator stations. Evaporator stations consist of a series of evaporators, termed multiple-effect evaporators; typically, a series of four evaporators. Steam from large boilers is used to heat the first evaporator, and the steam from the water evaporated in the first evaporator is used to heat the second evaporator. This heat transfer process continues through the four evaporators and as the temperature decreases (due to heat loss) from evaporator to evaporator, the pressure inside each evaporator also decreases which allows the juice to boil at the lower temperatures in the subsequent evaporator. Some steam is released from the first three evaporators, and this steam is used in various process heaters in the plant. The evaporator station in cane sugar manufacture typically produces a syrup with about 60 percent solids and 40 percent water.

2.1.8 Syrup Sulphitation

Syrup from the evaporators is bleached with Sulphur dioxide which is produced by burning rock Sulphur with a rich supply of air. This is done at a PH of 5.5. Syrup sulphitation is done in a tower before the syrup is sent to the pan supply tanks for pan boiling.

2.1.9 Centrifugation

Crystallization of the sugar starts in the vacuum pans, whose function is to produce sugar crystals from the syrup. In the pan boiling process, the syrup is evaporated until it reaches the super saturation stage.

At this point, the crystallization process is initiated by "seeding" or "shocking" the solution. When the volume of the mixture of liquor and crystals, known as massecuite, reaches the capacity of the pan, the evaporation is allowed to proceed until the final massecuite is formed. At this point, the contents of the vacuum pans (called "strike") are discharged to the crystallizer, whose function is to maximize the sugar crystal removal from the massecuite. From the crystallizer, the massecuite (A massecuite) is transferred to high-speed centrifugal machines (centrifugals), in which the mother liquor (termed "molasses") is centrifuged to the outer shell and the crystals remain in the inner centrifugal basket. The crystals are washed with water and the wash water centrifuged from the crystals. The liquor (A molasses) from the first centrifugal is returned to a vacuum pan and reboiled to yield a second massecuite (B massecuite), that in turn yields a second batch of crystals. The B massecuite is transferred to the crystallizer and then to the centrifugal, and the raw sugar is separated from the molasses. This raw sugar is combined with the first crop of crystals. The molasses from the second boiling (B molasses) is of much lower purity than the first molasses. It is reboiled to form a low grade massecuite (C massecuite), which goes to a crystallizer and then to a centrifugal. This low-grade cane sugar is mingled with syrup and is sometimes used in the vacuum pans as a "seeding" solution. The final molasses from the third stage (blackstrap molasses) is a heavy, viscous material used primarily as a supplement in cattle feed. The cane sugar from the A massecuites is dried in fluidized bed and cooled. After cooling, the cane sugar is transferred to packing bins and then sent to bulk storage. Cane sugar is then generally bulk loaded to trucks, railcars, or barges.

2.1.10 Sugar Drying

The cane sugar from the A massecuites is dried in the fluidized bed drier and cooled. After cooling, the cane sugar is transferred to packing bins and then sent to bulk storage. Cane sugar is then generally bulk loaded to trucks, railcars, or barges.

2.2 Evaporation

Evaporation is the process of removing excess water from clarified juice by use of the evaporators. This is done to concentrate clarified juice to a brix of $55^0 - 70^0$, which will allow crystallization in the later stage of boiling at pan floor.

2.2.1 Evaporators

In the evaporation process, there are typically four 'effects' (*i.e.*, vessels/units) connected in series to concentrate the clarified juice to syrup by boiling in a multiple-effect arrangement. The first effect is normally heated using low pressure steam (~100 kPa) and subsequent effects are heated from the vapour produced from the previous effect.

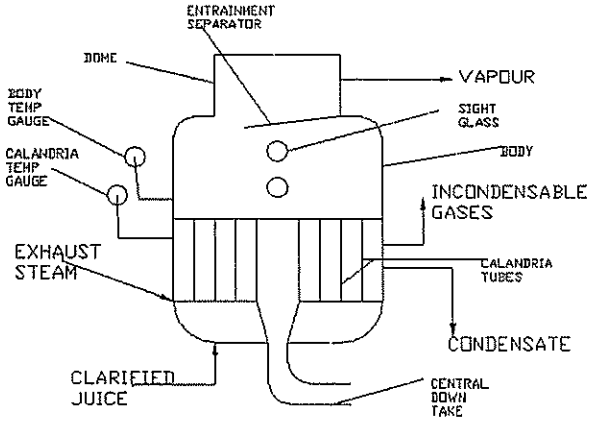

Figure 1.1: Structure of an evaporator

2.2.2 Evaporator operations

Evaporator operations are not automated, but manually controlled. The amount of juice and steam entering an evaporator is regulated using the control valves, by increasing or reducing on set points and opening positions of the inlet and outlet valves. From the control room, we can observe the amount of juice in the evaporators, juice flow rate, steam pressure, steam flow rate, calandria and body temperatures. Basing on these observations, an operator takes an action.

Exhaust steam enters the calandria and juice enters the evaporator down saucer through juice distribution pipes. Juice enters into the calandria tubes where it is heated at around 112^0C and as boiling takes place, boiled juice will overflow through the central down take to another body or to the syrup tank.Juice level in an evaporator is maintained at about 30 – 40% of the calandria height to create rising film effect, hence maximum evaporation and secondly to prevent entrainment due to high levels.

In the quadruple effect evaporator set, clear juice flows to the first body where it is heated in calandria tubes using exhaust steam to around 120^{0}C and boiled juice will overflow to the second body where the source of heat are vapours from the first body. From the second body concentrated juice will overflow to the third and fourth body where boiling takes place under vacuum. Calandria and body temperatures go on reducing as juice moves from the first body to the fourth. Temperature and vacuum are inversely proportional.

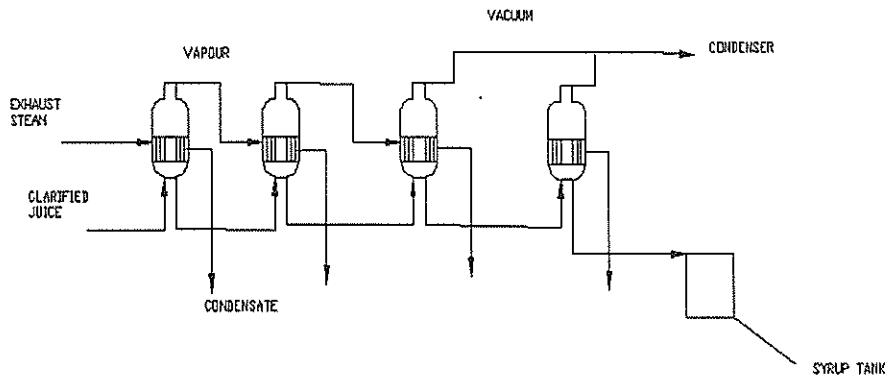

Figure 1.2: Quadruple effect evaporator set

2.3 Inversion losses in evaporators

In clarifiers and evaporators, sucrose is usually lost through thermally-catalyzed acid degradation/inversion reactions or physically by vapor entrainment, although the latter is much less than the former (Eggleston et al., 2004). Acid degradation or inversion of sucrose is a misnomer because it can occur up to pH 8.3 (Parker, 1970). It can also be catalyzed by glucose, fructose and/or salts (Eggleston et al, 1996), and this is becoming a bigger problem with the worldwide change to green cane from burnt cane, which has greater amounts of such associated impurities. In the few sucrose loss studies that have been undertaken across evaporators in South

Africa (Schaffler et al,1985; purchase et al, 1987), the U.S.A. (Edye and Clarke, 1995), and Mauritius (Wong and Tse, 1996), it was generally observed that most inversion occurred in the pre-evaporators. This is not surprising as the highest temperatures and lowest 'Brix values occur there, which are both conducive to higher inversion rates. Pre-evaporators are usually larger to produce vapor for juice heaters and vacuum pans.

The measurement of sucrose losses across unit processes in the sugar industry is notoriously difficult, and this has also meant that very limited diagnosis of process problems contributing to losses has occurred. Sucrose levels are traditionally measured at the factory using pol purity measurement, but pol cannot be used to measure small sucrose losses as degradation products formed with a high positive pol suppress the overall pol changes due to losses (Eggleston et al, 1996). Even using the more accurate techniques of high performance liquid chromatography and gas chromatography is difficult (Schaffler et al, 1985; Purchase et al, 1987; Edye and Clarke, 1995; Wong and Tse, 1996), because actual sucrose loss may be smaller than the experimental error of the technique being used. Furthermore, the relatively large amounts of sucrose present, compared to the smaller amounts of glucose and fructose, also contributes to the greater difficulty in measuring actual sucrose decreases.

Glucose is used instead of fructose because it is more acid and heat stable. % Chloride has been used as a reference marker instead of 'Brix because some dissolved solids may be degraded into volatile compounds (Schaffler et al, 1985; Wong and Tse, 1996), but Wong and Tse (1996) observed that there was a constant °Brix/% Chloride ratio in evaporator juices and syrups which implied that °Brix is not preferentially destroyed to % chloride. Therefore, either 'Brix or % chloride can be used as a reference marker in evaporator studies.

Measurements of sucrose losses based on a %glucose/%sucrose ratios, however, are still underestimates. This is because they are based on the assumption that no glucose is degraded, although Schaffler et al (1987) reported that even under adverse acid conditions, compensation for glucose degradation increased sucrose losses by only 0.03%, but this may vary with factory and region.

CHAPTER THREE

3.0 Methods and materials.

The materials used for this research were all sourced from the laboratory of SCOUL, Lugazi. Different parameters were measured in the juices from the clarifier and evaporator respectively. Various parameters were analyzed in the laboratory to determine the percentage increase in reducing sugars between clarified juice and syrup. All methods carried out were according to the standard operating procedures of SCOUL, Lugazi.

3.1 Sampling and sampling design

3.1.1 Study area

The study area covered a selected unit operation that is to say evaporation in the sugar processing plant in SCOUL, Lugazi.

3.1.2 Sample selection

Small portions of clarified juice were taken from each of the overflow box of the clarifier ensuring that all the chambers are sampled. Consequently, syrup was sampled as it flowed to the syrup tanks. For reliable results, samples for analysis were taken in phases, cooled immediately to prevent evaporation, and analysed for pH, brix, pol and reducing sugars, for a period of five days. pH tends to vary with the different environmental conditions for even relatively small period of time, therefore it will always be determined before other tests.

3.2 Determination of pH of juice

Chemical process, biological process and reaction rates are dependent on pH. Different kinds of bacteria work in certain pH ranges, it's from this note that the pH of the juice during clarification and evaporation has to be monitored closely.

3.2.1 Principle of method

The pH basically determines the activity of H^+ ions by potential meter measurement using a glass electrode as a reference electrode. pH meters are equipped with temperature compensator that can correct error by only showing the actual pH at the temperature of measurement. Calibration of the instrument with electrodes immersed in buffer solution, which after removal should be thoroughly rinsed, compensates for the changes in the electrode.

3.2.2 Procedure

The pH meter was calibrated by rinsing the electrode with distilled and de-ionized water, dried with soft tissue. The rinsed electrode was then immersed in buffer 4.0, 7.0 and 9.0 solutions in a beaker and then the pH were set to the respective values. To take the pH of the sample, the electrode was rinsed with a portion of the test sample before immersing in 200 ml beaker containing the test sample, sufficient to provide uniformity and keeping solids in suspension. The reading was taken after a period of about one minute when the meter beeped.

3.3 Determination of brix of juice

This includes the measure of dissolved substances in a solution, in particular the measure of the amount of sugar (sucrose), or the % brix, in cane juice. This is done with the help of an

instrument called a refractometer. A refractometer is used to figure out the relative "sugar weight" of the sample compared to distilled water of the juice.

3.3.1 Principle of operation

A refractometer works using the principle of light refraction through liquids. As light passes from air into liquid it slows down. This phenomenon is what gives a "bent" look to the objects that are partially submerged in water. The more dissolved solids water contains, the slower the light and the more pronounced the bending effect on light. Refractometers use this principle to determine the amount of dissolved solids in liquids by passing light through the sample and showing the refracted angle on the scale. The scale commonly used is a brix scale. Brix scale is the number of grams of pure cane sugar dissolved in 100 grams of pure water.

3.3.2 Procedure

The refractometer was calibrated by lifting up the prism presser and placing 2-3 drops of distilled water on top of the prism assembly. The prism presser was closed so the water spreads across the entire surface of the prism. The instrument was then cleaned with a soft tissue, then 2-3 drops of the desired juice sample had to be transferred to the prism surface with a dropper. The prism surface was closed with the presser. Finally, the read key was pressed to take the reading and the displayed reading was recorded as the corrected brix.

3.4 Determining the pol and purity of the juice.

Pol refers to the apparent sucrose present in a juice sample. The pol of a juice sample is determined by an instrument called a polarimeter. A polarimeter measures the rotation of polarized light as it passes through an optically active fluid. The measured valve will be used to

measure the concentration of the sugar solution. A polarimeters consists of a polarized light source, analyzer, a graduated circle to measure the angle of rotation and the sample tubes.

3.4.1 Principle of operation

In a polarimeter a polarized light is introduced to the tube containing a solution with the substance to be measured. If the compound in the tube is optically active, the plane of light would be rotated on its way through the tube. The observed rotation is as a result of different components of the plane polarized light interacting differently with chiral center.

3.4.2 Procedure

The polarimetry tube was thoroughly cleaned after measurement had been performed. A solution of known concentration of juice was prepared. The pol tube had to be filled with the juice until no air bubbles in the path of the tube were recognized. The tube was then placed in the rails of the instrument. The zero button was pressed to zero the instrument. The reading on the display was recorded as the pol reading of the sample and the tube was taken out and thoroughly cleaned with the solvent to be measured. The pol% of the original sample was got from the pol factor table.

$$\text{Purity} = (pol\%)/(corrected\ brix) \times 100$$

3.5 Determining reducing sugars in the juice

3.5.1 Original Lane and Eynon method

This method is used for determination of invert sugar; glucose, fructose and of invert sugar in the presence of sucrose.

3.5.2 Principle of the method

The main part of the reducing sugar solution is added to a fixed volume of strongly alkaline cupric complex salt solution (Fehling's solution). The liquid is then boiled. More of the reducing sugars solution is then added until all the cupric ions are reduced to cuprous oxide, when the blue color of the solution disappears. This end point may be more precisely determined by use of methylene blue, which undergoes discoloration. The experimental conditions, including the volume and the concentrations of the Fehling's solution and the time of the boiling must be adhered to.

3.5.3 Procedure

A sample of 75g of the juice was taken into a 250ml volumetric flask. 24ml of neutral lead acetate solution were added, mixed and made up to the 250ml mark with distilled water. Then filtered and 250ml of the filtrate were taken into a 250ml volumetric flask. 20ml of disodium phosphate and potassium oxalate were added, mixed and made up to the mark with distilled water and filtered. 5ml of Fehling's solution (A) and 5ml of Fehling's solution (B) was pippeted into a conical flask. Titrating with the filtrate (adding rapidly the first 10ml, then progressively slowly using methyl blue indicator to brick-red end point). Titration was done within 3 minutes.

a) 10ml of Fehling's solution = 0.05128 of reducing sugars

b) Reducing sugar % = $\frac{0.05128 \times 100}{BR(T) \times Fehling's\ factor(F) \times Dilution\ factor(D)}$

Titration reading = T ml; Fehling's factor = (F); Dilution factor = D (0.24)

$$\text{Dilution factor} = \frac{75}{250} \times \frac{200}{250} = 0.24$$

CHAPTER FOUR

4.0 Results and Discussions

Table 4.1 shows the results of the analysed parameters of clarified juice; which included pH, reducing sugars content (RS%), purity, apparent sucrose (pol%) and total soluble solids (brix). Purity was a ratio of pol% to brix expressed as a percentage. Sucrose inversion was monitored indirectly by observing the changes in reducing sugars and purity.

Table 4.1: Results of analysed parameters of clarified juice

	pH	RS%	Purity	Pol%	Brix
	7.18	0.80	83.60	8.93	10.69
	7.05	0.81	83.34	8.95	10.75
	6.94	0.81	83.32	9.01	10.82
	6.86	0.85	82.56	9.02	10.93
	6.79	0.91	82.30	9.04	10.99
Averages	6.96	0.83	83.02		

Cane juice is ideal environment rich in organic and inorganic substances that is extremely favourable to development of a wide variety of micro-organisms. Typically, mixed juice has a pH level between 4.5 and 5.5 and consists of approximately 10-16% (w/w) sucrose. The mixed juice is heated from 45^0-75^0C (primary heating). This along with the low pH causes

deterioration of the sucrose content (inversion) hence the presence of reducing sugars being detected in clarified juice on several days respectively. Lime added as milk of lime during clarification raised the pH of the mixed juice from 5.5 – 6.96 on average to minimize sucrose inversion. Optimally the target pH of clarified juice is expected to be within 6.8 – 7.2 and the reducing sugar content to be about 0.80. From the analyses and observations therefore, the pH of clarified juice samples were within optimal range and this lead to a reduction in reducing sugar content to an average of 0.83%.

4.1 Effect of pH on clarified juice

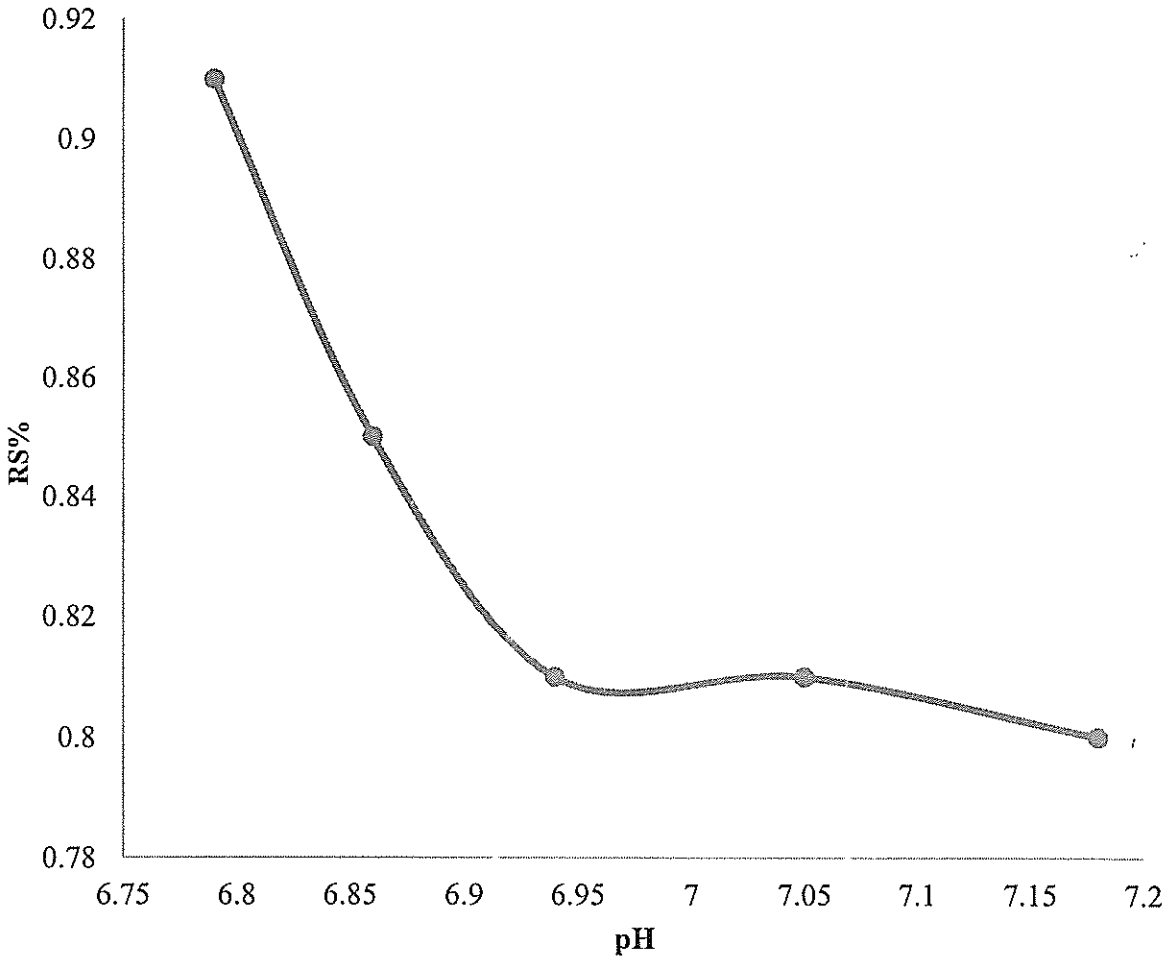

Figure 0.1: Effect of pH on clarified juice.

From figure 4.1 it was observed that pH was inversely proportional to the reducing sugars content in both clarified juice and syrup. Which meant that an increase in pH lead to a decrease in reducing sugars and consequently a drop in pH increased the reducing sugars content. Therefore, more inversion occurred at a pH 6.79 and less at 7.18.

4.2 Effect of reducing sugars content on the purity of clarified juice

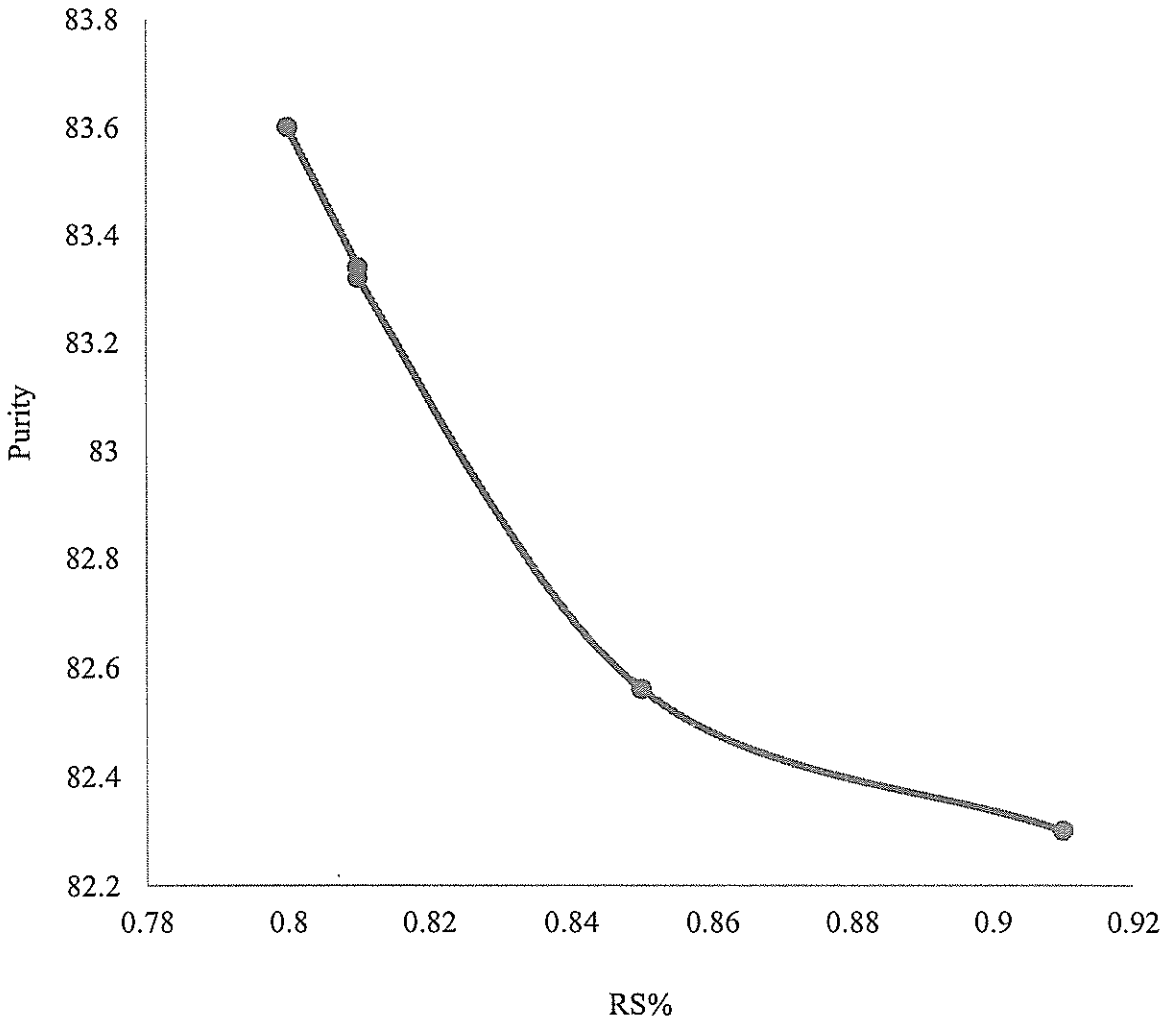

Figure 4.2 : Effect of reducing sugars on the purity of clarified juice.

The sucrose content in juice is typically between 7.5 g/100g and 16 g/100g cane and the ratio of sucrose (pol) to the soluble solids provides the purity value, which is also a parameter of cane quality. As seen from Table 1 and Figure 4.2 reducing sugars content were inversely related to the purity values, which indicated that an increase in the reducing sugars content decreased the purity of the juice meaning more inversion occurred and consequently, a decrease in the reducing

sugars content lead to an increase in the purity of the juice. This therefore indicates that purity can be used as a marker for reducing sugars/inversion losses.

Table 4.2 shows the results of the analysed parameters of syrup that is to say pH, reducing sugars content (RS%), purity, pol% and brix. Purity was measured as a ratio between pol% and brix expressed as a percentage. The averages of the three parameters were taken. For comparison purposes in this study, sample pHs were sampled at room temperature. However, at higher temperatures the pHs dropped because of the dissociation of water and sugars provides more H^+ ions. It is usually known that pH drops across evaporator stations because of:

1. The precipitation of basic salts.
2. The formation of acids from sugar degradation reactions.
3. The increasing brix concentrations concentrating H^+ ions.

Scaling also had a dramatic effect on increasing sucrose losses. For pre-evaporators, the amount sucrose inversion increased proportionally. This can be explained by scale formation that reduces the heat transfer co-efficient, which in turn raises the compensatory temperature and retention time in the evaporator.

Table 4.2: Results of analysed parameters of syrup

	PH	RS%	Purity	Pol%	Brix
	7.06	3.05	83.04	51.90	62.50
	6.54	3.30	82.00	49.36	60.20
	6.29	3.85	81.52	47.85	58.70
	6.08	3.91	81.05	42.55	52.50
	6.04	4.38	80.72	36.00	44.60
Averages	6.40	3.70	81.70		

4.3 Effect of pH on syrup

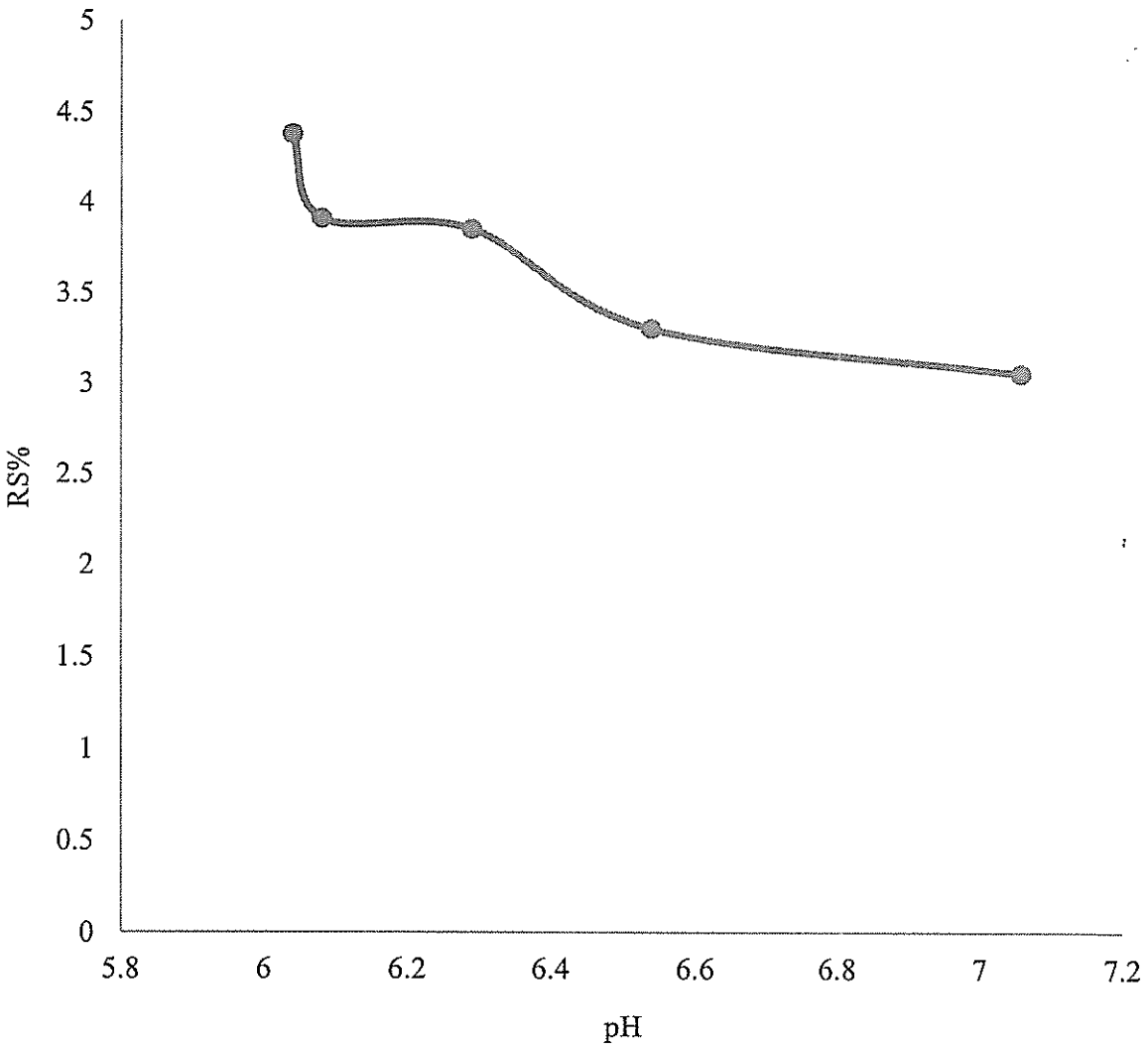

Figure 4.3 : Effect of pH on syrup

From Figure 4.3 the pH of syrup was inversely related to the reducing sugars content, that is to say an increase in pH decreased the reducing sugars content, and a drop in pH decreased the reducing sugars content.

4.4 Effect of reducing sugars content on the purity of syrup

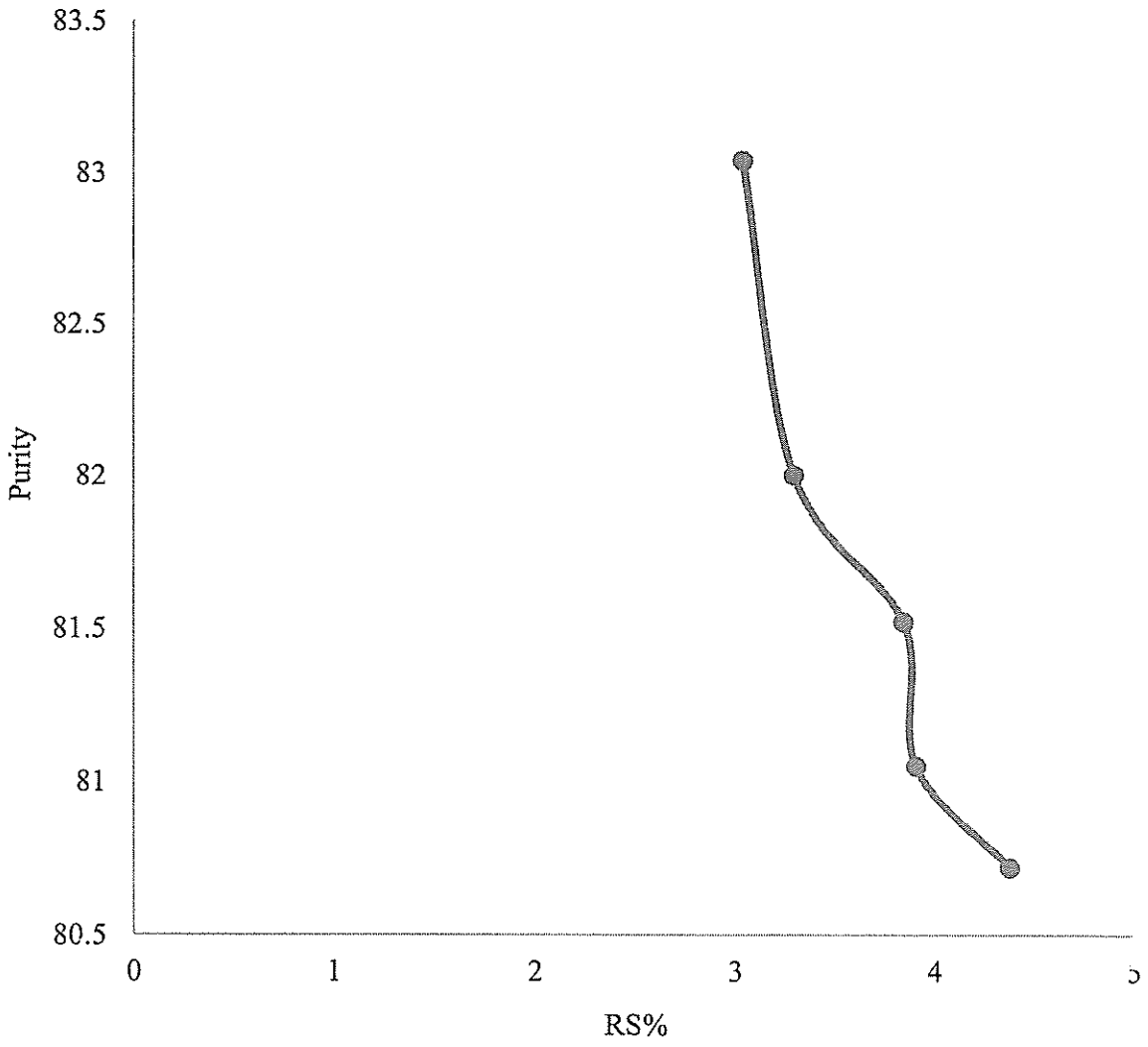

Figure 4.4 : Effect of reducing sugars content on the purity of the syrup

From Figure 4.4 it was observed that the effect of reducing sugars content on the purity of syrup was similar to that of clarified juice, where an increase in reducing sugars content lead to a decrease in the purity of syrup, while a decrease in reducing sugars content lead to an increase in the purity of syrup meaning less inversion occurred.

4.5 Calculation of the percentage increase in reducing sugars

The percentage increase in reducing sugars between the clear sugar and the syrup were calculated using the average values of RS% of the clear juice and syrup obtained from Table 4.1 and 4.2 respectively thus:

% Increase in reducing sugars = (RS% syrup – RS% clear juice)/RS% syrup

% Increase in reducing sugars = 3.70-0.83/3.70

= 0.776×100

= 77.56%

The % increase in reducing sugars is an estimation of percentage sucrose loss due to inversion process as a result of the multiple effect evaporation during sugar concentration from clear juice to syrup. The percentage increase in reducing sugar was 77.56%.

CHAPTER FIVE

5.0 Conclusion and Recommendations

5.1 Conclusion

Reducing sugars ratio have been successfully used to localize and measure sucrose degradation in evaporators of SCOUL. Most losses occurred in the evaporator vessel where there was appreciable scaling and blocking of evaporator tubes resulting in longer residence time, sucrose inversion and more scale deposition, which entailed further inversion. In other cases, losses took place in the first evaporator vessels where there was extensive vapor bleeding. Therefore, there was much inversion that occurred across multiple effect evaporators, this was indicated by the percentage increase in reducing sugars between clarified juice and syrup.

5.2 Recommendations

Control of the final evaporator syrup (FES) pH is recommended to minimize sucrose losses in the clarifiers and evaporators. A target pH of 6.5 – 6.8 (equivalent to a target clarifier juice pH of 7.0-7.2), as measured at room temperature, is recommended. Further studies of sucrose losses across evaporator stations are needed. Further studies on scale reducers or inhibitors are also warranted.

REFERENCES

Doherty & Edye (1999). An overview on the chemistry of clarification of cane sugar juice. *Proceedings of the Australian Society of Sugar Cane Technologists, 21*, 381-388.

Edye L A and Clarke M A (1995). Sucrose loss and colour formation in evaporators. Proc. mt.Soc. Sug. Cane Technol., Vol 1, pp.238-246.

Eggleston G, Monge A and Ogler B (2003). Sugarcane factory performance of cold, intermediate and hot lime clarification processes. *J. Food Proc. and Preserv.*, 26(6), 433-454.

Eggleston G, Vercellotti JR, Edye LA, Clarke MA (1996). Effects of salts on the initial thermal degradation of concentrated aqueous solutions of sucrose. J. Carbohdyr. Chem., 15(1), 81-94.

Eggleston, G. (2000a). Hot and cold lime clarification in raw sugar manufacture I. Juice quality differences. *Int. Sugar J.,* Vol. 102, No. 1221, 406–416.

Eggleston, G. (2000b). Hot and cold lime clarification in raw sugar manufacture II. Lime addition and settling behaviour. *Int. Sugar J.*, Vol. 102, No. 1221, 453 – 457.

Eggleston, G., Damms, M., Monge, A., & Endres, T. (2004). New insights on sucrose losses across factory evaporators and juice and syrup clarifiers. In *Proc. Sug. Proc. Res. Conf.,* 349- 370.

Godshall MA and Wartelle *L* (2002). Composition of evaporator scale in Louisiana mills. Proc.Sug. Proc. Res.Conf., New Orleans, p.379-385.

Helmut B and Joachim P H (2003). Scaling in evaporators. Internat. Sugar J., *105, 475-480.*

Honig P (1963). In Principles of Sugar Technology, Vol III. Elsevier, Amsterdam, p. 119-120.

Parker K J (1970). Chemical problems in the sucrose industry. Suer. Belge. 89, 119.

Purchase B S, Day-Lewis C M J and Schaffler K J (1987). A comparative study of sucrose degradation in different evaporators. Proc. S Afr Sug Technol Assn.. 8-13.

Putman (2001). Timing cleanings to boost heat exchange performance. Chem. Proc., May edn, p.39-41.

Schaffler et al (1985). An evaluation of sucrose inversion and monosaccharide degradation across evaporation at Darnall mill. Proc. S. *Afr.* Sug. Technol. Assn.,p. 73-78.

Wong and Tse (1996). Estimation of sucrose inversion in evaporators. *Proc. S Afr Sug Technol Assn.*, 70, p. 136-240.